DWG. Nº	LAYOUTS
D-206280	LOWER ROLL
D-160720	UPPER ROLL
C-128121	HEAD ADJUSTMENT - CROWN
E-160147	CROSS SECTION THRU SHEAR
E-128555	SECTION THRU FRONT POSTS
D-202951	SHEAR - DRIVE
D-151150	FRONT STOCK GUIDE
D-150135	REAR STOCK GUIDE
D-161124	CENTER STOCK SUPPORT
C-163024	DIAGRAM - TIMING

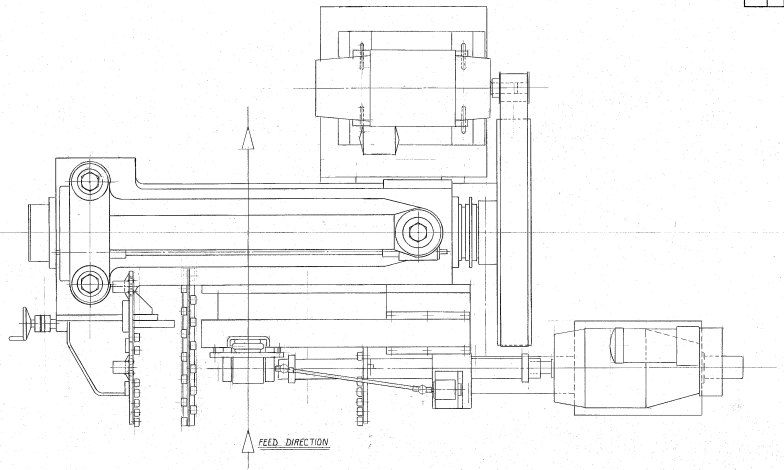

FEED SPECIFICATIONS -

STRIP WIDTH - MAX. -	40"
STRIP WIDTH - MIN. -	24"
FEED LENGTH - MAX. -	44"
FEED LENGTH - MIN. -	18"
PRESS SPEED - MAX. -	150 S.P.M.
PRESS SPEED - MIN. -	45 S.P.M.

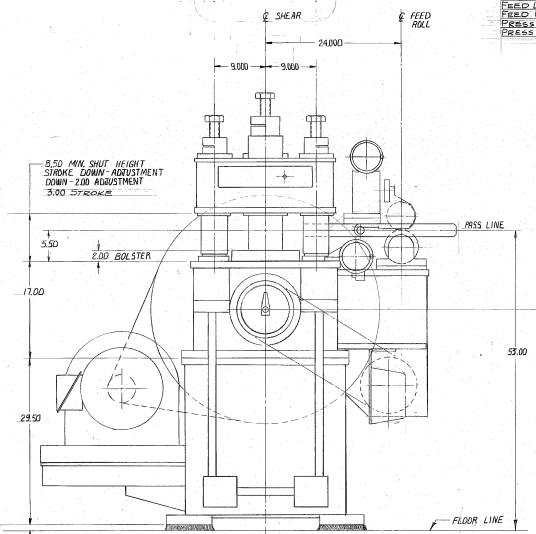

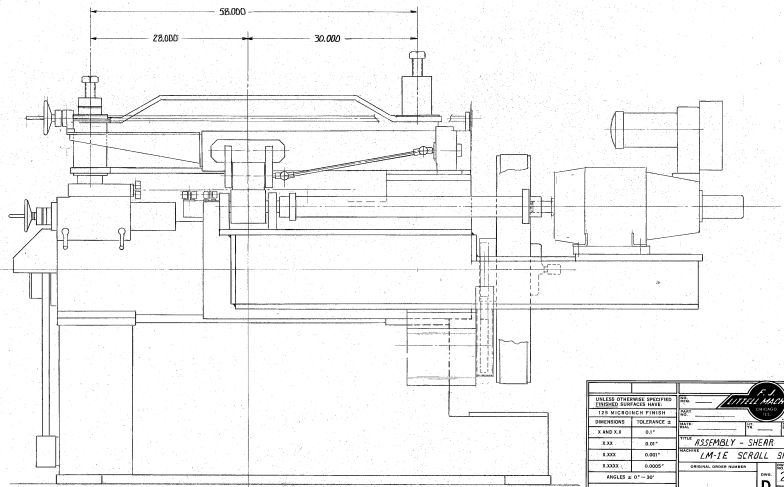

UNLESS OTHERWISE SPECIFIED FINISHED SURFACES HAVE:	
125 MICROINCH FINISH	
DIMENSIONS	TOLERANCE ±
X AND X.X	0.1"
X.XX	0.01"
X.XXX	0.001"
X.XXXX	0.0005"
ANGLES ± 0° - 30'	
BREAK SHARP CORNERS 0.00 UNLESS OTHERWISE SPECIFIED	

F. J. LITTELL MACH. CO.

DWN. BY		DATE	2-29-84
CHKD. BY		SCALE	12" = 1.00
APPD. BY		DWG. SIZE	TJG
DATE		CK.	
TITLE	ASSEMBLY - SHEAR		
MACHINE	LM-1E SCROLL SHEAR		
ORIGINAL ORDER NUMBER		DWG. NO.	202950
		SIZE	D
		SHEET	1
		SHEETS	1

FILING LOCATION D-202950

REVISIONS

DATE	SYM.	WAS	BY
		D-140622	
		D-277120	